M81935/7 SELF-LUBRICATED ROD END BEARINGS

AS81935/7 • AS81935 (formerly MIL-B-81935)

- Female type, rod end
- High temperature — low wear
  -65°F to +325°F (-53.9°C to +162.8°C)
- Material: Bearing inner ring: CRES PH13-8Mo, HRC 43-47
  Bearing outer ring: CRES 17-4PH
  Rod end housing: CRES PH13-8Mo, HRC 40-44, passivated
- Liner: Fibriloid® or "E" Uniflon® qualified to AS81820
- Threads conform to UNJF-3B per AS8879. For left hand thread add "L" or "1" depending on part number ordered
  Example: see below
- For rod end with keyway in end of shank add "K" or "1"
  Example: see below
- For rod end with deep key slot on base add "W" Example: see below

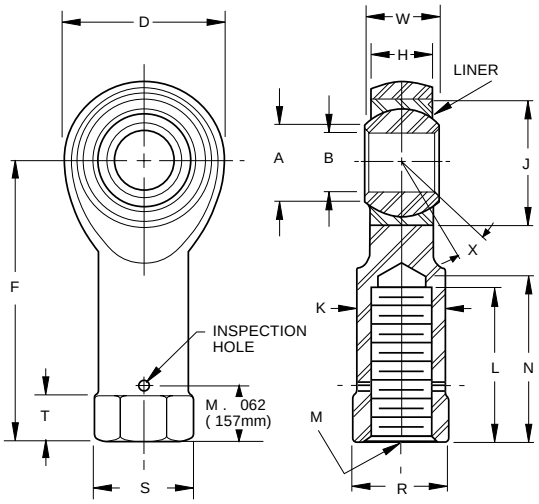

SPECIFICATIONS AND ORDERING INFORMATION

DIMENSIONS — TOLERANCES

PART NUMBERS FPHE Dash No.	02-820 Dash No.	M81935/7 Dash No.	B +0.000, -.0005 +0.00, -.013	D ±010 +.25	L(1) Min.	F ±010 +.25	K ±010 +.25	W +.000, -.002 +.00, -.05	H ±005 +.13	A Min.	J Max.	N Max.	S(2) Ref.	T +.010, -.062 +.25, -1.57	R(1) +.002, -.010 +.05, -.25	M UNJF-3B PER AS8879	X° Min.
			in. mm	in. mm	in. mm	in. mm	in. mm	in. mm	in. mm	in. mm	in. mm	in. mm	in. mm	in. mm	in. mm		
03	-03	-03	.1900 4.826	.806 20.47	.750 19.05	1.375 34.92	.422 10.72	.437 11.10	.337 8.56	.30 7.6	.6250 15.875	.875 22.22	.500 12.70	.188 4.78	.437 11.10	$^5/_{16}$-24	15
04	-04	-04	.2500 6.350	.806 20.47	.750 19.05	1.469 37.31	.422 10.72	.437 11.10	.337 8.56	.30 7.6	.6250 15.875	.875 22.22	.500 12.70	.188 4.78	.437 11.10	$^5/_{16}$-24	15
05	-05	-05	.3125 7.938	.900 22.86	.875 22.22	1.625 41.28	.485 12.32	.437 11.10	.327 8.31	.36 9.1	.6875 17.462	1.000 25.40	.580 14.73	.250 6.35	.500 12.70	$^3/_8$-24	14
06	-06	-06	.3750 9.525	1.025 26.04	1.000 25.40	1.812 46.02	.547 13.89	.500 12.70	.416 10.57	.47 11.9	.8125 20.638	1.125 28.58	.660 16.76	.250 6.35	.562 14.27	$^3/_{18}$-24	8
07	-07	-07	.4375 11.112	1.150 29.21	1.125 28.58	2.000 50.80	.610 15.49	.562 14.27	.452 11.48	.54 13.7	.9062 23.017	1.250 31.75	.720 18.29	.250 6.35	.625 15.88	$^7/_{16}$-20	10
08	-08	-08	.5000 12.700	1.337 33.96	1.250 31.75	2.250 57.15	.735 18.67	.625 15.88	.515 13.08	.61 15.5	1.0000 25.400	1.375 34.92	.880 22.35	.250 6.35	.750 19.05	$^1/_2$-20	9
10	-10	-10	.6250 15.875	1.525 38.74	1.375 34.92	2.500 63.50	.860 21.84	.750 19.05	.577 14.66	.75 19.1	1.1875 30.162	1.500 38.10	1.020 25.91	.375 9.52	.875 22.22	$^5/_8$-18	12
12	-12	-12	.7500 19.050	1.775 45.09	1.625 41.28	2.875 73.03	.985 25.02	.875 22.23	.640 16.26	0.85 21.6	1.3750 34.925	1.750 44.45	1.160 29.46	.375 9.53	1.000 25.40	$^3/_4$ - 16	13
14	-14	-14	.8750 22.225	2.025 51.44	1.875 47.63	3.375 85.73	1.110 28.19	.875 22.23	.765 19.43	1.00 25.4	1.6250 41.275	2.062 52.37	1.300 33.02	.500 12.70	1.125 28.58	$^7/_8$ - 14	6
16	-16	-16	1.0000 25.400	2.775 70.49	2.125 53.98	4.125 104.78	1.688 42.88	1.375 34.93	1.015 25.78	1.27 32.3	2.1250 53.975	2.312 58.72	2.020 51.31	.563 14.30	1.750 44.45	$1^1/_4$ - 12	12

(1)Completed thread.
(2)Measured across corners or diameter.

LOAD RATINGS

FPHE Dash No.	02-820 Dash No.	Ultimate Static Load lbf.	Ultimate Static Load N	Fatigue Load lbf.	Fatigue Load N	Axial Proof Load lbf.	Axial Proof Load N	Weight Max. lbs.	Weight Max. kg	No Load Rational Breakaway Torque Min. in.-lbs.	Min. Nm	Max. in.-lbs.	Max. Nm
03	-03	2360	10400	1470(1)	6550(2)	1000	4400	0.080	0.030	.5	.06	6	.68
04	-04	4860	21600	2380	10600	1000	4400	0.084	0.038	.5	.06	6	.68
05	-05	7180	32000	3020	13400	1100	4900	0.102	0.046	1	.11	15	1.70
06	-06	8550	38000	3570	16000	1660	7350	0.161	0.073	1	.11	15	1.70
07	-07	12000	53000	4800	21200	1850	8300	0.212	0.096	1	.11	15	1.70
08	-08	19500	86500	8260	36500	2040	9000	0.325	0.147	1	.11	15	1.70
10	-10	21900	98000	9180	40500	2430	10800	0.481	0.218	1	.11	15	1.70
12	-12	29300	130000	11600	51500	1810	11500	0.673	0.306	1	.11	15	1.70
14	-14	34500	151000	11100	58000	1320	14800	0.959	0.436	1	.11	24	2.71
16	-16	80300	357000	30400	135000	4340	19300	2.717	1.235	1	.11	24	2.71

Notes:

Ultimate Static Load — No fracture of rod ending housing or bearing will occur when the ultimate static load is applied in the bearing along th shank center line.

Axial Static Proof Load — Is the retention strength of the bearing within the eye of the rod end housing. No push out of the bearing cartridge will occur when the housing eye is supported and the axial proof load is applied to the face of insert bearing inner ring.

Fatigue Load — The rod end housing will withstand 50,000 cycles of full tension to 10% tension loading at speeds up to 2800 cpm. Load is applied in line with the rod end shank putting the eye in tension.

(1)Based on bolt bending fatigue strength 180000 psi
(2)Based on bolt bending fatigue strength 127kg/mm^2.

Check for availability.

Bearing configuration	Part number designations for a 0.2500 in. bore rod end		
Base P/N (no options)	FPHE04	02-820-04	M81935/7-04
Keyway on threads	FPHEK04	02-820-041	M81935/7-04K
Left hand thread	FPHEL04	12-820-04	M81935/7-04L
Deep key slot on base	FPHWE04	02-820-04W	M81935/7-04W

©2008 RBC Bearings Incorporated. All rights reserved.